See Far, Go Further

4257-1621 E

HIKVISION

6/10kVA

Uninterruptible Power Systems

Operation Manual

Legal Information

©2023 Hangzhou Hikvision Digital Technology Co., Ltd. All rights reserved.

About this Manual

The Manual includes instructions for using and managing the Product. Pictures, charts, images and all other information hereinafter are for description and explanation only. The information contained in the Manual is subject to change, without notice, due to firmware updates or other reasons. Please find the latest version of this Manual at the Hikvision website (https://www.hikvision.com/).

Please use this Manual with the guidance and assistance of professionals trained in supporting the Product.

Trademarks

HIKVISION and other Hikvision's trademarks and logos are the properties of Hikvision in various jurisdictions.

Other trademarks and logos mentioned are the properties of their respective owners.

Disclaimer

TO THE MAXIMUM EXTENT PERMITTED BY APPLICABLE LAW, THIS MANUAL AND THE PRODUCT DESCRIBED, WITH ITS HARDWARE, SOFTWARE AND FIRMWARE, ARE PROVIDED "AS IS" AND "WITH ALL FAULTS AND ERRORS". HIKVISION MAKES NO WARRANTIES, EXPRESS OR IMPLIED, INCLUDING WITHOUT LIMITATION, MERCHANTABILITY, SATISFACTORY QUALITY, OR FITNESS FOR A PARTICULAR PURPOSE. THE USE OF THE PRODUCT BY YOU IS AT YOUR OWN RISK. IN NO EVENT WILL HIKVISION BE LIABLE TO YOU FOR ANY SPECIAL, CONSEQUENTIAL, INCIDENTAL, OR INDIRECT DAMAGES, INCLUDING, AMONG OTHERS, DAMAGES FOR LOSS OF BUSINESS PROFITS, BUSINESS INTERRUPTION, OR LOSS OF DATA, CORRUPTION OF SYSTEMS, OR LOSS OF DOCUMENTATION, WHETHER BASED ON BREACH OF CONTRACT, TORT (INCLUDING NEGLIGENCE), PRODUCT LIABILITY, OR OTHERWISE, IN CONNECTION WITH THE USE OF THE PRODUCT, EVEN IF HIKVISION HAS BEEN ADVISED OF THE POSSIBILITY OF SUCH DAMAGES OR LOSS.

YOU ACKNOWLEDGE THAT THE NATURE OF THE INTERNET PROVIDES FOR INHERENT SECURITY RISKS, AND HIKVISION SHALL NOT TAKE ANY RESPONSIBILITIES FOR ABNORMAL OPERATION, PRIVACY LEAKAGE OR OTHER DAMAGES RESULTING FROM CYBER-ATTACK, HACKER ATTACK, VIRUS INFECTION, OR OTHER INTERNET SECURITY RISKS; HOWEVER, HIKVISION WILL PROVIDE TIMELY TECHNICAL SUPPORT IF REQUIRED.

YOU AGREE TO USE THIS PRODUCT IN COMPLIANCE WITH ALL APPLICABLE LAWS, AND YOU ARE SOLELY RESPONSIBLE FOR ENSURING THAT YOUR USE CONFORMS TO THE APPLICABLE LAW. ESPECIALLY, YOU ARE RESPONSIBLE, FOR USING THIS PRODUCT IN A MANNER THAT DOES NOT INFRINGE ON THE RIGHTS OF THIRD PARTIES, INCLUDING WITHOUT LIMITATION, RIGHTS OF PUBLICITY, INTELLECTUAL PROPERTY RIGHTS, OR DATA PROTECTION AND OTHER PRIVACY RIGHTS. YOU SHALL NOT USE THIS PRODUCT FOR ANY PROHIBITED END-USES, INCLUDING THE DEVELOPMENT OR PRODUCTION OF WEAPONS OF MASS DESTRUCTION, THE DEVELOPMENT OR

PRODUCTION OF CHEMICAL OR BIOLOGICAL WEAPONS, ANY ACTIVITIES IN THE CONTEXT RELATED TO ANY NUCLEAR EXPLOSIVE OR UNSAFE NUCLEAR FUEL-CYCLE, OR IN SUPPORT OF HUMAN RIGHTS ABUSES.
IN THE EVENT OF ANY CONFLICTS BETWEEN THIS MANUAL AND THE APPLICABLE LAW, THE LATTER PREVAILS.

All rights reserved.
The information in this document is subject to change without notice.

Publish statement

Thank you for purchasing this series UPS.
This series UPS is an intelligent, single phase in single phase out, high frequency online UPS designed by our R&D team who is with years of designing experiences on UPS. With excellent electrical performance, perfect intelligent monitoring and network functions, smart appearance, complying with EMC and safety standards, The UPS meets the world's advanced level.
Read this manual carefully before installation
This manual provides technical support to the operator of the equipment.

Contact the nearest hazardous waste disposal station when the products or components are discarded

Contents

1．Safety 3

1.1 Safety notes 3

1.2 Symbols used in this guide 3

2．Main Features 4

2.1 Summarization 4

2.2 Functions and Features 4

3．Installation 5

3.1 Sub Rack UPS 5

3.2 Tower UPS 6

3.3 Cabinet Outlook 6

3.4 LCD control panel 7

3.5 Installation notes 8

3.6 External Protective Devices 9

3.7 Power Cables 9

3.8 Power cable connect 10

3.9 Battery connection 12

3.10 UPS parallel Installation 14

3.11 Maintenance breaker auxiliary signal cable connection 15

3.12 Computer access 15

4．Operation 17

4.1 Operation Modes 17

4.2 Turn on/off UPS 19

4.3 The LCD Display 22

4.4 Parallel parameters setting 30

4.5 Display Troubleshooting 32

4.6 Options 33

Appendix 1 Specifications 35

Appendix 2 Problems and Solution 37

Appendix 3 USB communication port definition 38

Appendix 4 RS232 communication port definition 39

Appendix 5 RS485 communication port definition 40

Appendix 6 EPO instruction 41

Appendix 7 Optional port definition 42

1 . Safety

Important safety instructions - Save these instructions

There exists dangerous voltage and high temperature inside the UPS. During the installation, operation and maintenance, please abide the local safety instructions and relative laws, otherwise it will result in personnel injury or equipment damage. Safety instructions in this manual act as a supplementary for the local safety instructions. Our company will not assume the liability that caused by disobeying safety instructions.

1.1 Safety notes

1. Even no connection with utility power, 208/220/230/240VAC voltage may still exist at UPS terminal!
2. For the sake of human being safety, please well earth the UPS before starting it.
3. Don't open or damage battery, for the liquid spilled from the battery is strongly poisonous and do harmful to body!
4. Please avoid short circuit between anode and cathode of battery, otherwise, it will cause spark or fire!
5. Don't disassemble the UPS cover, or there may be an electric shock!
6. Check if there exists high voltage before touching the battery
7. Working environment and storage way will affect the lifetime and reliability of the UPS. Avoid the UPS from working under following environment for long time
   - ◆ Area where the humidity and temperature is out of the specified range(temperature 0 to 40℃, relative humidity 5%-95%)
   - ◆ Direct sunlight or location nearby heat
   - ◆ Vibration Area with possibility to get the UPS crashed.
   - ◆ Area with erosive gas, flammable gas, excessive dust, etc
8. Keep ventilations in good conditions otherwise the components inside the UPS will be over-heated which may affect the life of the UPS.

1.2 Symbols used in this guide



WARNING!

Risk of electric shock



CAUTION!

Read this information to avoid equipment damage

2 . Main Features

2.1 Summarization

This series UPS is a kind of single-in-single-out high frequency online UPS.

The UPS can solve most of the power supply problems, such as blackout, over-voltage, under-voltage, voltage sudden drop, oscillating of decreasing extent, high voltage pulse, voltage fluctuation, surge, inrush current, harmonic distortion (THD), noise interference, frequency fluctuation, etc..

This UPS can be applied to different applications from computer device, automatic equipment, communication system to industry equipment.

2.2 Functions and Features

◆Integrated solution for data center

UPS can be integrated with battery cabinet, PDU external maintenance bypass, offering excellent choice for data center.

◆Digital Control

This series UPS is controlled by Digital Signal Processor (DSP); enhance, it increases reliability, performance, self-protection, and self-diagnostics and so on.

◆Battery Configurable

From 16 blocks to 20 blocks, the battery voltage of this series UPS can be configured at 16 blocks, 18 blocks or 20 blocks, according to your convenience.

◆Charging Current is configurable

Via setting tool, the user may set the capacity of the batteries as well as reasonable charging current. Constant voltage mode, constant current mode or floating mode can be switched automatically and smoothly.

◆Intelligent Charging Method

The series UPS adopts advanced three-stage charging method—

1st stage: high current constant current charging

to guarantee to charge back to 90%;

2nd-stage: Constant Voltage

In order to vitalize battery and make sure batteries are fully charged

3rd stage: floating mode.

With this 3-stage charging method, it extends the life of the batteries and guarantees fast charging.

◆LCD Display

With LCD plus LED displays, the user may easily get UPS status and its operational parameters, such as input/output voltage, frequency & load%, battery % and ambient temperature, etc...

◆Intelligent Monitoring Function

Via optional SNMP Card, you may remotely control and monitor the UPS.

◆EPO Function

The series UPS may be completely shut off when the EPO is actived.

3 . Installation

3.1 Sub Rack UPS

3.1.1 Appearance of UPS

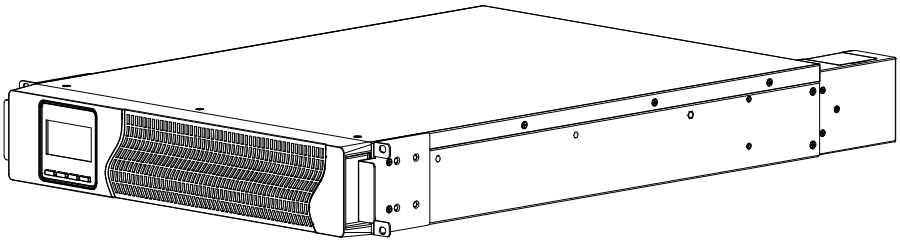

3.1.2 Installation

Fix the rails to the cabinet.

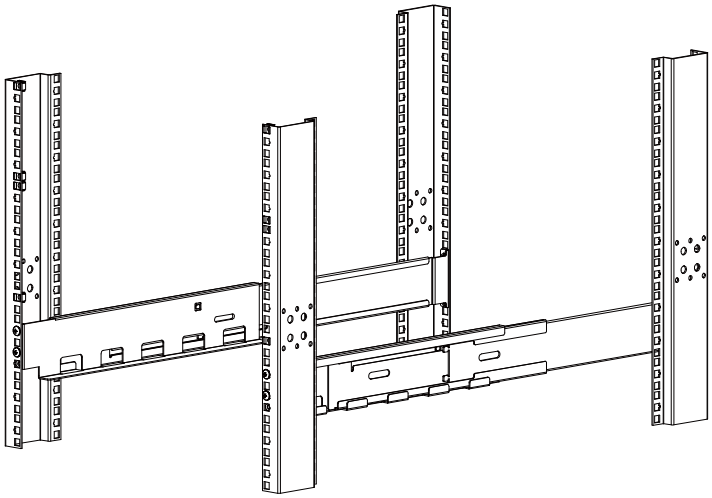

After installing the rails, install the floating screw according to the front panel of the UPS, then insert the UPS into the cabinet on the rails and fix the screws.

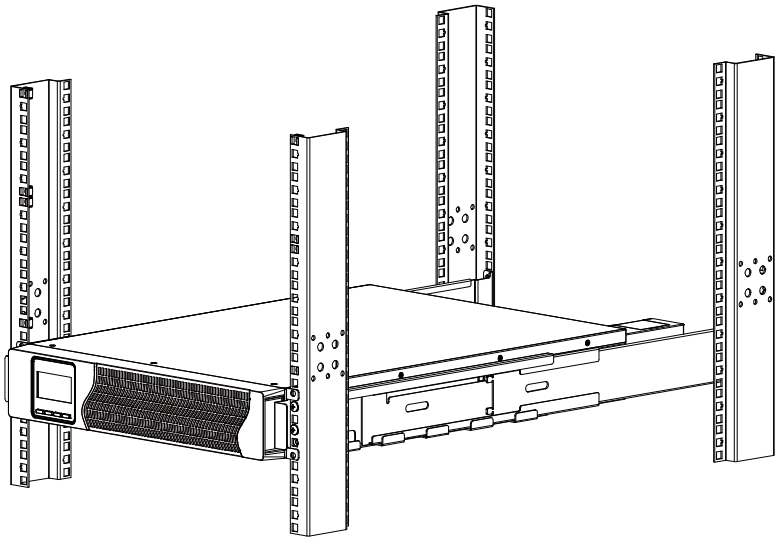

3.2 Tower UPS

3.2.1 Installation

Assemb the bracket, according to the size of the UPS, and then the UPS can be directly placed on the bracket.

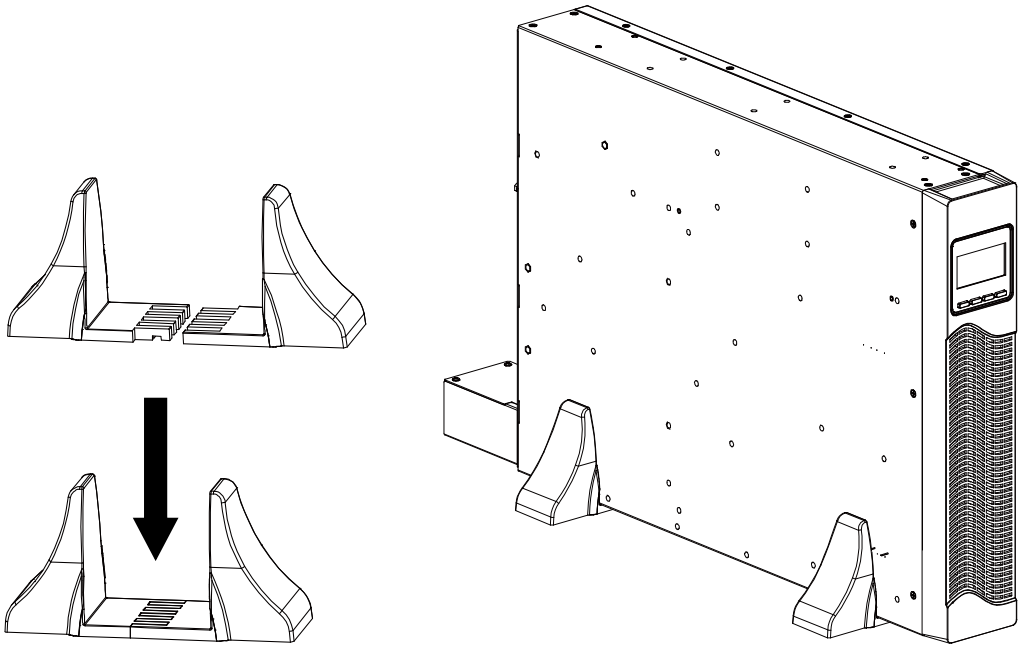

3.3 Cabinet Outlook

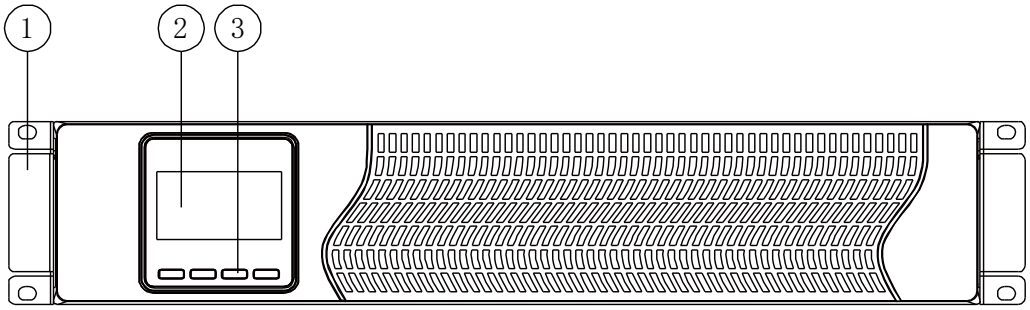

Front View

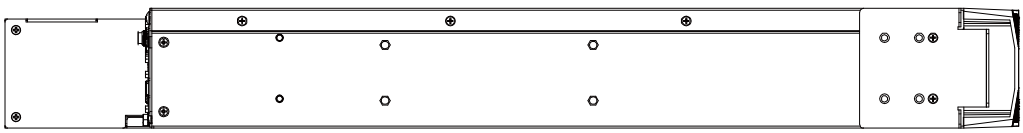

Side View

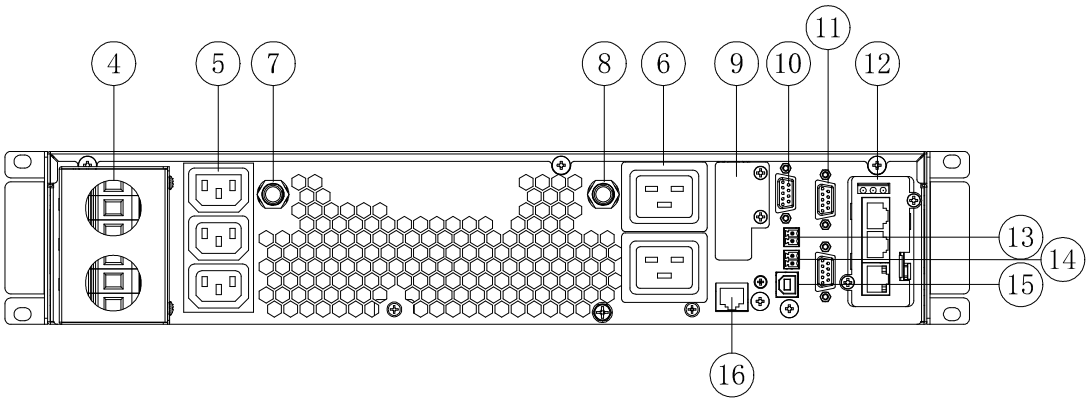

Rear View

(1) Suspension Loop	(2) LCD
(3) LCD Button	(4) Input & Output1 Terminal
(5) Output3 Socket C13	(6) Output2 Socket C19
(7) Output3 Breaker	(8) Output2 Breaker
(9) Battery Terminal	(10) RS232 port
(11) Parallel port	(12) Intelligent Slot
(13) MAINTAIN-AUXSWS port	(14) EPO port
(15) USB port	(16) RS485 port

3.4 LCD control panel

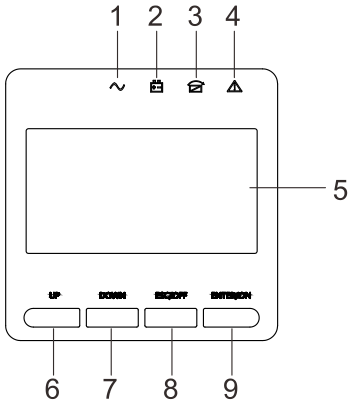

LCD control panel introduction

(1) INVERTER LED
(2) BATTERY LED
(3) BYPASS LED
(4) ALARM LED
(5) LCD display
(6) UP button
(7) DOWN button
(8) ESC /OFF button
(9) ENTER/ON button

3.5 Installation notes

Note: Consider for the convenience of operation and maintenance, the space in front and back of the cabinet should be left at least 100cm and 80cm respectively when installing the cabinet.

◆Please place the UPS in a clean, stable environment, avoid the vibration, dust, humidity, flammable gas and liquid, corrosive. To avoid from high room temperature, a system of room extractor fans is recommended to be installed. Optional air filters are available if the UPS operates in a dusty environment.

◆The environment temperature around UPS should keep in a range of 0℃ ~ 40℃. If the environment temperature exceeds 40℃, the rated load capacity should be reduced by 10% per 4℃. The max temperature can't be higher than 50℃.

◆If the UPS is dismantled under low temperature, it might be in a condensing condition. The UPS can't be installed unless the internal and external of the equipment is fully dry. Otherwise, there will be in danger of electric shock.

◆Batteries should be mounted in an environment where the temperature is within the required specs. Temperature is a major factor in determining battery life and capacity. In a normal installation, the battery temperature is maintained between 15°C and 25°C. Keep batteries away from heat sources or main air ventilation area, etc.



WARNING!

Typical battery performance data are quoted for an operating temperature between 20°C and 25°C. Operating it above this range will reduce the battery life while operation below this range will reduce the battery capacity.

◆Should the equipment not be installed immediately it must be stored in a room so as to protect it against excessive humidity and or heat sources.



CAUTION!

An unused battery must be recharged every 6months Temporarily connecting the UPS to a suitable AC supply mains and activating it for the time required for recharging the batteries.

◆The highest altitude that UPS may work normally with full load is 1000 meters. The load capacity should be reduced when this UPS is installed in place whose altitude is higher than 1000 meters, shown as the following table:

(Load coefficient equals max load in high altitude place divided by nominal power of the UPS)

Altitude (m)	1000	2000	2500	3000
Load coefficient	100%	90%	85%	80%

◆The UPS cooling is depending on fan, so it should be kept in good air ventilation area. There are many ventilation holes on the front and rear, so they should not be blocked by any exotic obstacles.

3.6 External Protective Devices

For safety reasons, it is necessary to install, external circuit breaker at the input A.C. supply and the battery. This chapter provides guidelines for qualified installers that must have the knowledge of local wiring practices for the equipment to be installed.

◆**External Battery**

The UPS and its associated batteries are protected against the effect of over-current through a DC compatible thermo-magnetic circuit-breaker (or a set of fuses) located close to the battery.

◆**UPS Output**

Any external distribution board used for load distribution shall be fitted with protective devices that may avoid the risk of UPS overloaded.

◆**Over-current**

Protection device shall be installed at the distribution panel of the incoming main supply. It may identify the power cables current capacity as well as the overload capacity of the system.

3.7 Power Cables

◆The cable design shall comply with the voltages and currents provided in this section, Kindly follow local wiring practices and take into consideration the environmental conditions (temperature and physical support media) .



WARNING!

Upon starting. Please ensure that you are aware of the location and operation of the external isolators which are connected to the UPS input/bypass supply of the mains distribution panel. Check to see if these supplies are electrically isolated. And post and necessary warning signs to prevent any inadvertent operation.



CAUTION!

In order to maintain compliance with the EMC directive for products sold in Europe, output cord attached to the UPS must not exceed 10 meters in length.

3.7.1 Recommended cross-sectional areas for power cables

UPS cabinet	Cable Dimension			
	AC Input (mm^2)	AC Output (mm^2)	DC Input (mm^2)	Grounding (mm^2)
6kVA	6	6	6	6
10kVA	10	10	10	10

- When selecting, connecting, and routing power cables, follow local safety regulations and rules.
- If external conditions such as cable layout or ambient temperatures change, perform verification in accordance with the local regulations.
- The nominal battery discharge current refers to the current of twenty 12 V batteries at 240V in standard configuration.

- The battery cable specifications are selected based on 16 batteries by default and compatible with application scenarios with 16–20 batteries.

3.7.2 Power cable connector requirements

Model	Connector	Connection Mode	Bolt Type	Bolt Hole Diameter	Torque
6/10kVA	input connector	Crimped IT terminals	M4	4.5mm	3N•m
	Output connector	Crimped IT terminals	M4	4.5mm	3N•m
	Grounding connector	Crimped IT terminals	M4	4.5mm	3N•m

3.7.3 Recommended input front-end and output back-end circuit breakers

Model	Input circuit breaker	Maintenance circuit breaker	Output circuit breaker	Battery circuit breaker
6kVA	40A 1P	40A 1P	40A 1P	50A 2P
10kVA	63A 1P	63A 1P	63A 1P	63A 2P



CAUTION!

Protective earth cable: Connect each cabinet to the main ground system. For Grounding connection, follow the shortest route possible.



WARNING!

Failure to follow adequate earthing procedures may result in electromagnetic interference or in hazards involving electric shock and fire

3.8 Power cable connect

Once the equipment has been finally positioned and secured, connect the power cables as described in the following procedure.

Verify the UPS is totally isolated from its external power source and also all power isolators of the PDU are open. Check to see if they are electrically isolated, and post any necessary warning signs to prevent their inadvertent operation.

Open the UPS rear panel; Remove the cover of terminals for wiring easily.

3.8.1 Input connection

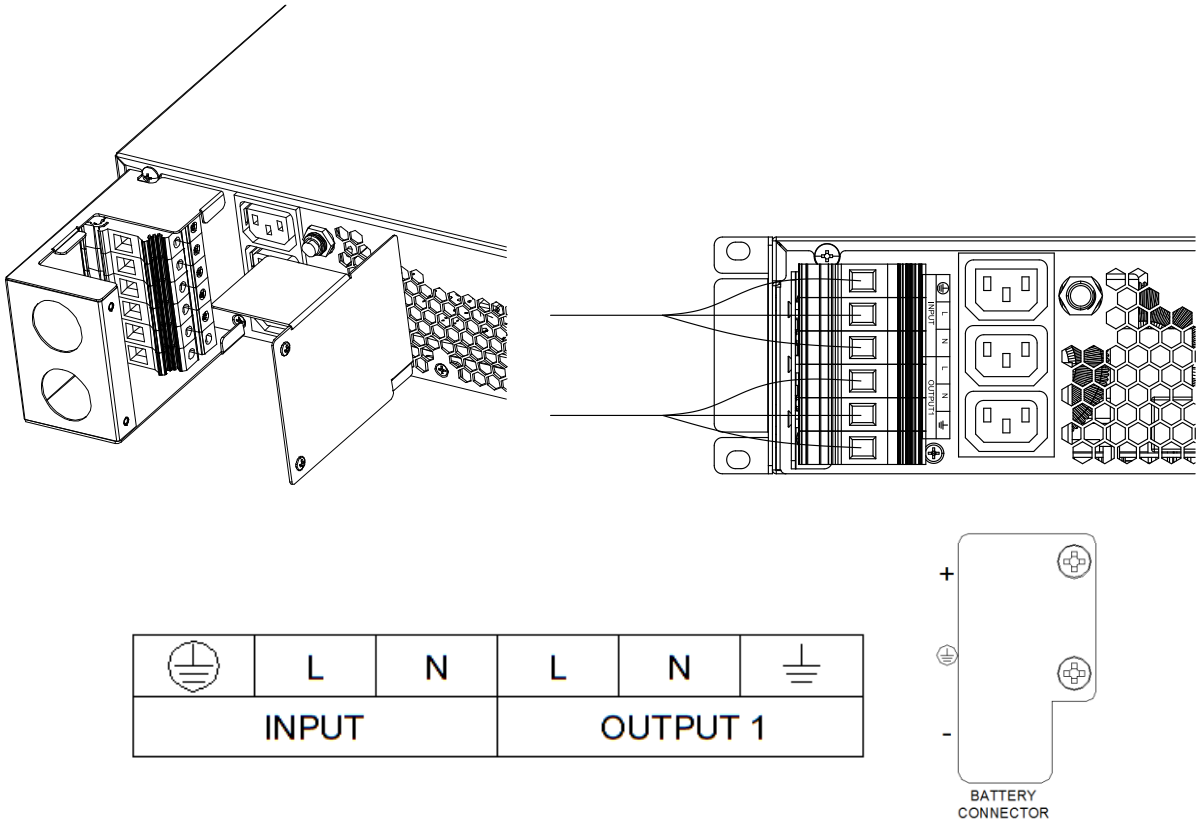

INPUT-L: Primary input Phase L	**INPUT -N:** Primary input Phase N
OUTPUT1-L: Output Phase L	**OUTPUT1-N:** Output Phase N
: Grounding	**BAT+:** Positive terminal of the batteries string
BAT-: Negative terminal of the batteries string	

Choose appropriate power cable. (Refer to the table above) and pay attention to the diameter of the connection terminal of the cable that should be greater than or equal to that of the connection poles;

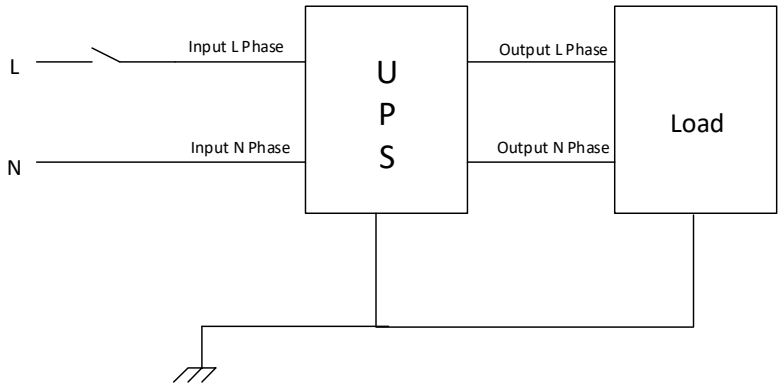

WARNING!



If the load equipment is not ready to accept power on the arrival of the commissioning engineer then ensure that the system output cables are safely isolated at their ends

Connect the safety earth and any necessary bonding earth cables to the copper earth screw located on the floor of the equipment below the power connections. All cabinets in the UPS must be grounded properly.



CAUTION!

The earthing and neutral bonding arrangement must be in accordance with local and national codes of practice.

3.9 Battery connection

3.9.1 Battery pack connection

All UPS and Battery Packs	Number of Battery Strings	UPS LCD Battery capacity setting
UPS+1 battery pack	1	9AH
UPS+2 battery packs	2	18AH
UPS+3 battery packs	3	27AH
UPS+4 battery packs	4	36AH
NOTE： Each battery pack contains one battery strings.		

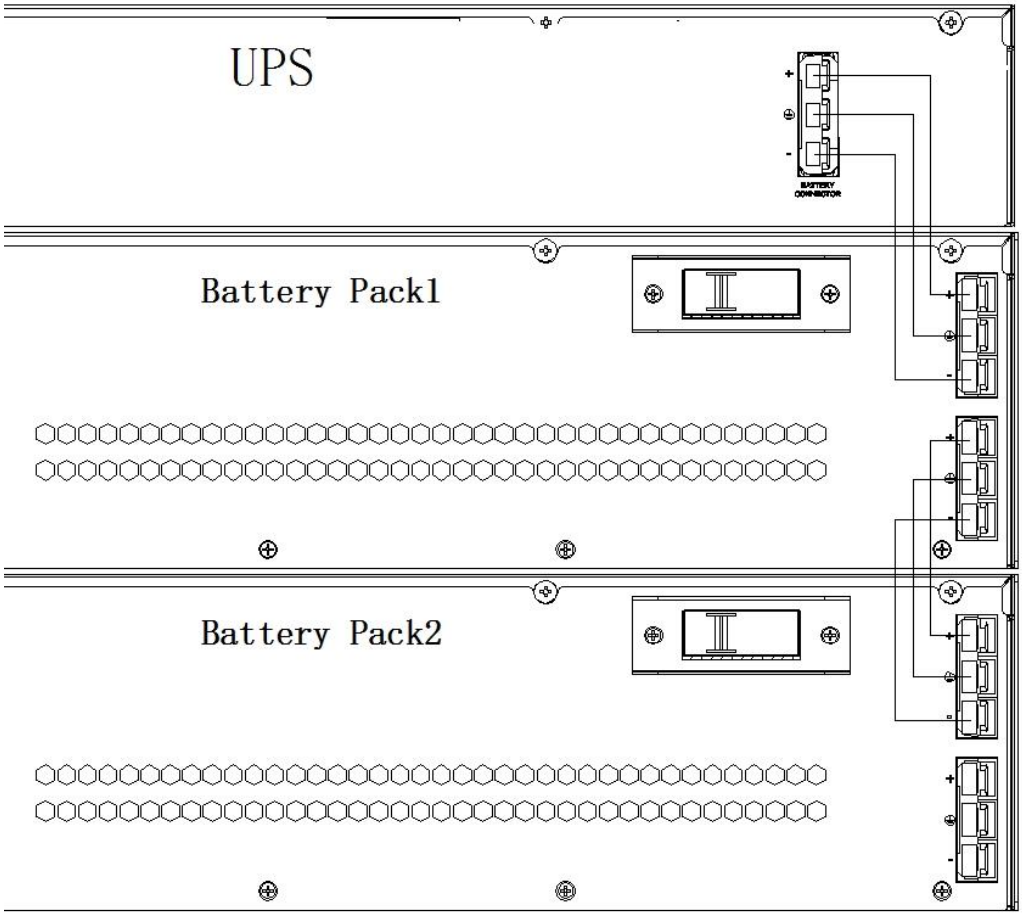

Note：

The BAT+ of the UPS battery connector is connected to the BAT+ of the VRLA battery pack connector, the BAT- of the UPS battery connector is connected to the BAT- of the VRLA battery pack connector. And the PE of the UPS battery connector is connected to the PE of the VRLA battery pack connector.

WARNING!

Only VRLA battery packs specifically designed for this series of UPS can be used, and cannot be mixed with battery packs from other brands. When using multiple battery packs in parallel, ensure that their positive and negative terminals of connectors are connected correctly.

3.10 UPS parallel Installation

The following sections introduce the installation procedures specified to the parallel system.

3.10.1 Cabinet installation

Connect all the UPS needed to be put into parallel system as below picture.

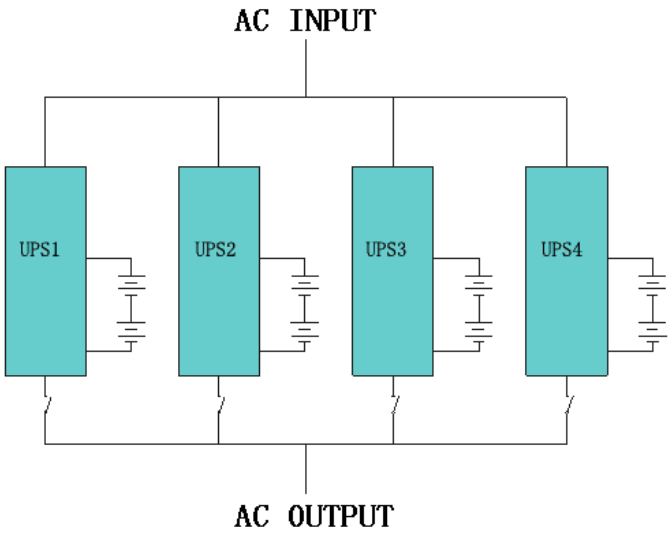

Make sure each UPS input breaker is in “off” position and there is no any output from each UPS connected.

WARNING!

Make sure the L, N lines are correct, and grounding is well connected. Each battery groups of UPS only be connected separately.

3.10.2 Parallel cable installation

Shielded and double insulated control cables available must be interconnected in a ring configuration between UPS units as shown below. The ring configuration ensures high reliability of the control.

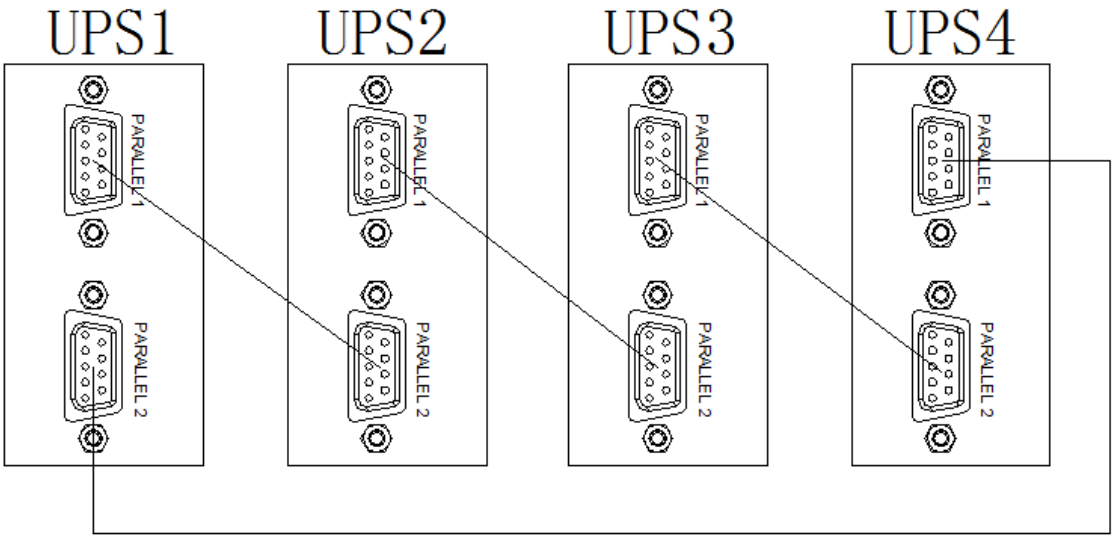

3.10.3 Requirement for the parallel system

A group of paralleled UPS behaves as one large UPS system but with the advantage of presenting higher reliability. In order to assure that all UPS are equally utilized and comply with relevant wiring rules, please follow the requirements below:

1) All UPS must be of the same rating and be connected to the same bypass source.

2) The outputs of all the UPS must be connected to a common output bus.

3) The length and specification of power cables including the bypass input cables and the UPS output cables should be the same. This facilitates load sharing when operating in bypass mode.

3.11 Maintenance breaker auxiliary signal cable connection

◆ Connect the auxiliary contact interface of the maintenance breaker of the PDU and the dry contact interface of the ups output dry port with cables. The dry contact of the UPS is normally closed logic and can be enabled when the interface is opened.

◆ When the maintenance breaker cover of the PDU is opened, the ups connected to the breaker will receive the dry contact signal and enter the maintenance state automatically.

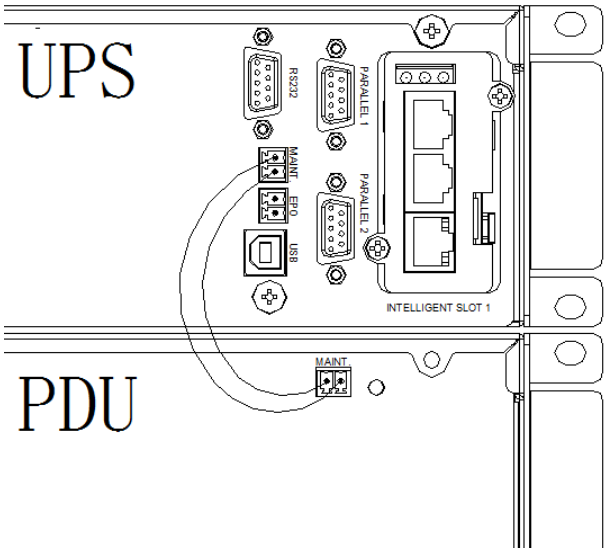

3.12 Computer access

◆Please download the corresponding software from the support section of the HIKVISION website.

Specific Operation and function description are provided for reference: KPM220 User Manual.

◆One end of a USB cable connect to the computer, the other end connect to the USB port on the UPS.

◆Open the software Kpower.

◆KPower adopts a flat design concept, the software concentrates all functions in the same window, the interface is simple and easy to operate. The main interface of the KPower program is shown as follows:

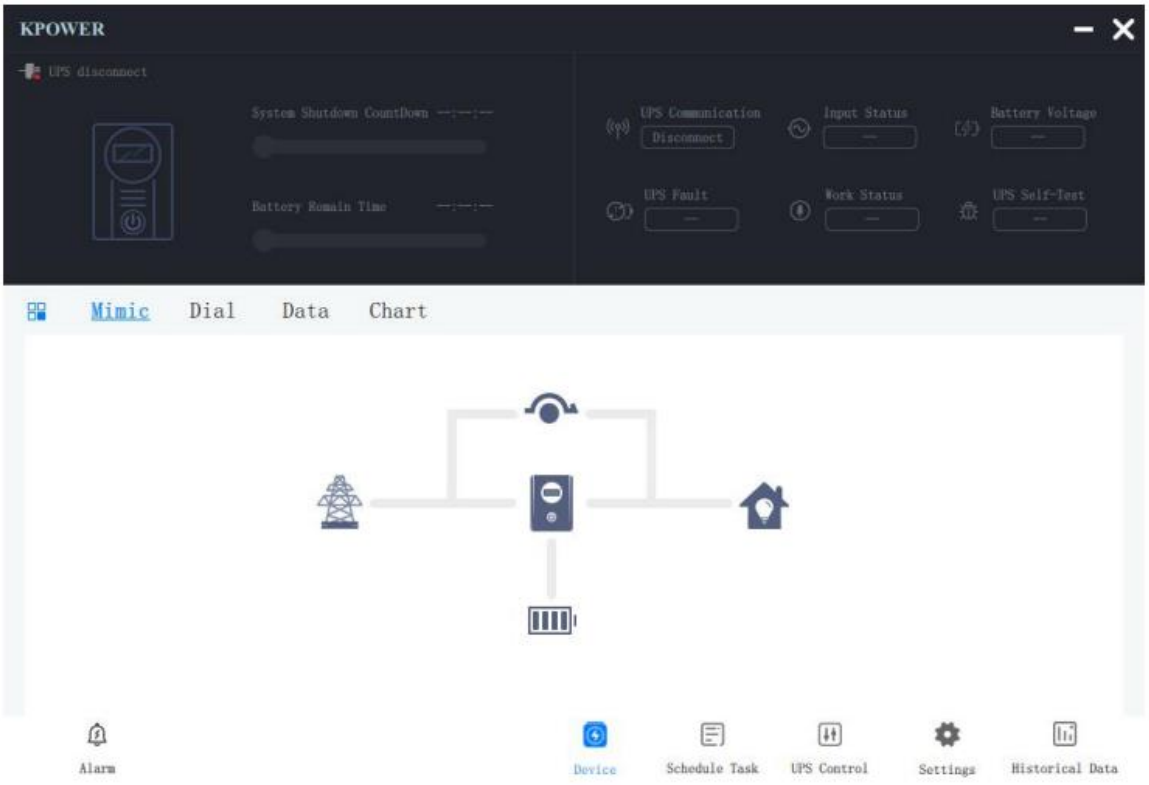

◆The device page is the main interface of the KPower software.The upper left corner of the page displays the communication connection status with the UPS.Whenthe communication connection is successful,the interface will display that the UPS is connected.

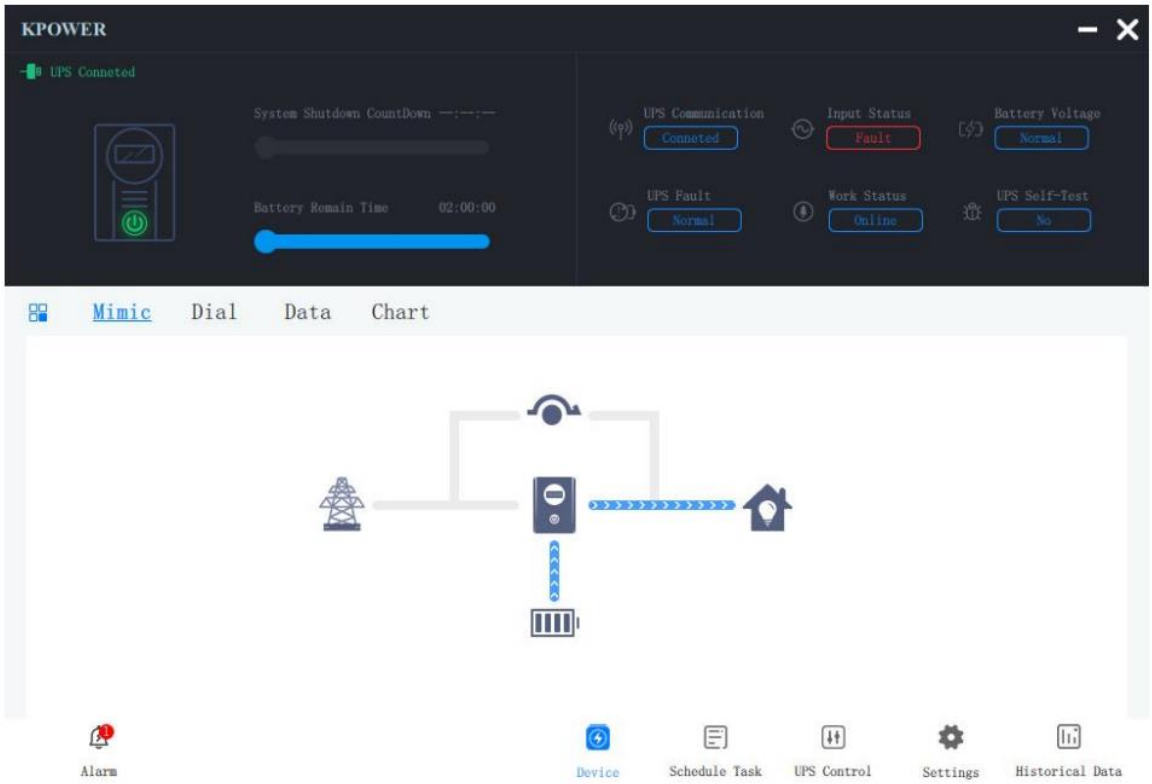

4 . Operation

4.1 Operation Modes

The UPS is a double-conversion on-line UPS that may operate in the following alternative modes：

◆Normal mode

The rectifier/charger derives power from the AC Mains and supplies DC power to the inverter while floating and boosting charge the battery simultaneously. Then, the inverter converts the DC power to AC and supplies to the load.

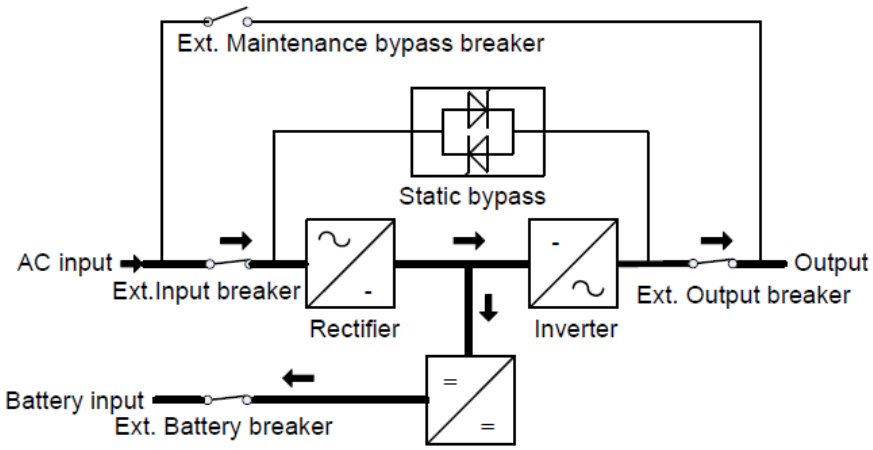

Single input

◆Battery mode (Stored Energy Mode)

If the AC mains input power fails, the inverter, which obtains power from the battery, supplies the critical AC load. There is no power interruption to the critical load. The UPS will automatically return to Normal Mode when AC recovers.

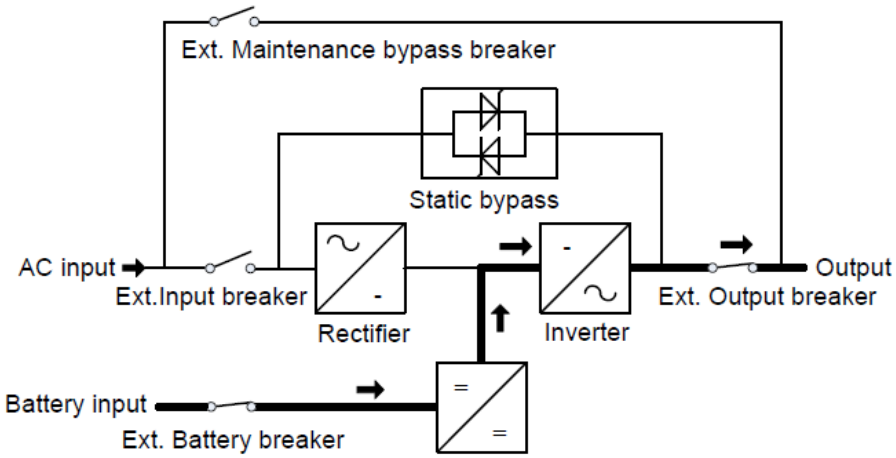

Single input

◆Bypass mode

If the inverter is out of order, or if overload occurs, the static transfer switch will be activated to transfer the load from the inverter supply to bypass supply without interruption to the critical load. In the event that the inverter output is not synchronized with the bypass AC source, the static switch will perform a transfer of the load from the inverter to the bypass with power interruption to the critical AC load. This is to avoid paralleling of unsynchronized AC sources. This interruption is programmable but typically set to be less

than an electrical cycle e.g. less than 15ms (50Hz) or less than 13.33ms (60Hz).

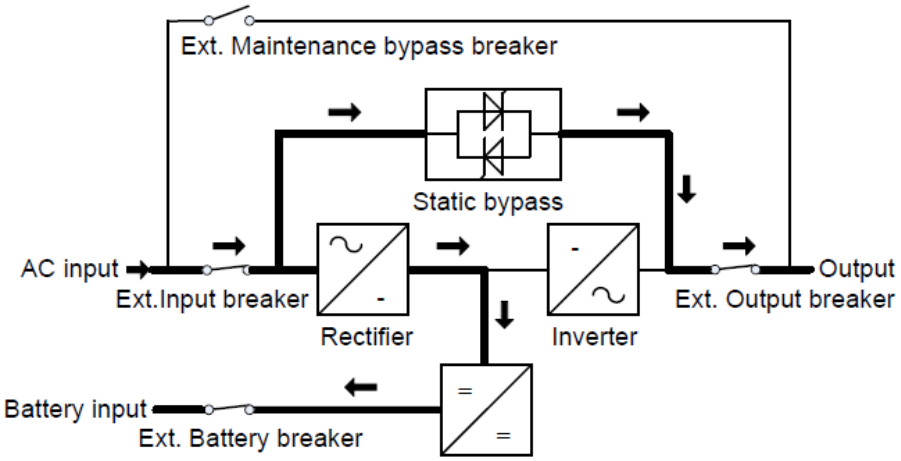

Single input

◆ECO Mode

When the UPS is at AC Mode and the requirement to the load is not critical, the UPS can be set at ECO mode in order to increase the efficiency of the power supplied. At ECO mode, the UPS works at Line-interactive mode, so the UPS will transfer to bypass supply. When the AC is out of set window, the UPS will transfer from bypass to Inverter and supplies power from the battery, and then the LCD shows all related information on the screen.

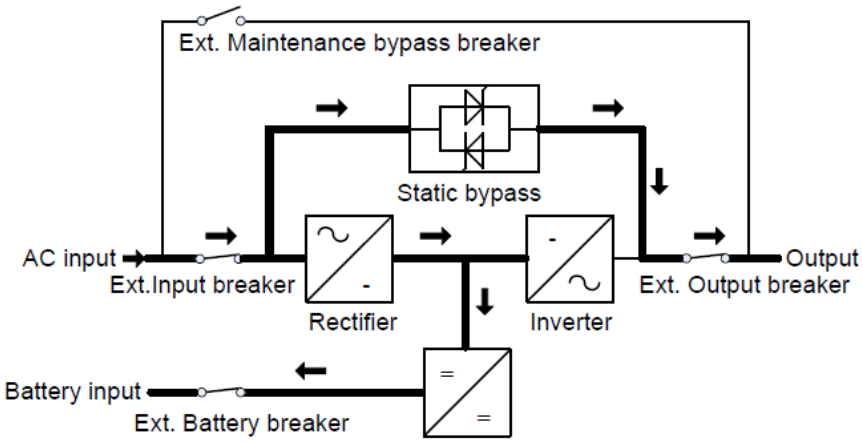

Single input

◆Maintenance mode (Manual Bypass)

A manual bypass switch is available to ensure continuity of supply to the critical load when the UPS is out of order or in repair and this manual bypass switch bears for equivalent rated load.

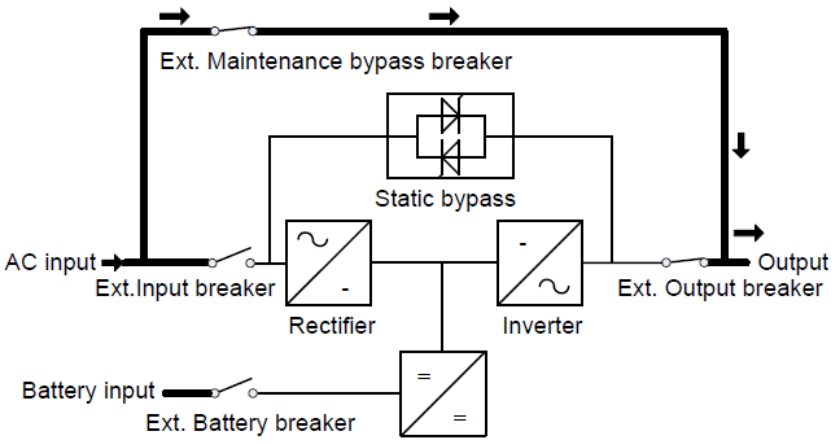

Single input

◆**Generator mode**

When the UPS input power is supplied by a generator (rather than utility power), the unit must be manually switched to GEN (Generator) Mode. In this mode, the UPS output will be derated to 75%. The rated capacity (kVA) of the generator should be at least 2 to 3 times that of the UPS.

Startup Recommendations: After starting the generator, wait (30-60 seconds) until the voltage and frequency are completely stable before closing the UPS input circuit breaker. Once the UPS automatically detects a valid power source, it will switch from Battery Mode to Online Mode. Under normal operation, if the input is fed by a generator, fluctuations or abnormalities in the input voltage and frequency may easily trigger an "Input Abnormal" alarm, or even cause the UPS to switch back to Battery Mode.

4.2 Turn on/off UPS

4.2.1 Restart procedure



CAUTION!

MAKE SURE GROUNDING IS PROPERLY DONE!

◆ Set the Battery Breaker to the “ON” position according to the user’s manual.

CAUTION ！



Check to see if the load is safely connected with the output of the UPS. If the load is not ready to receive power from the UPS, make sure that it is safely isolated from the UPS output terminals

◆ Turn ON OUTPUT breaker of the PDU.

◆ Turn ON INPUT breaker of the PDU.

If the Rectifier input is within voltage range, the rectifier will start up in 30 seconds then the inverter will start up after then.

If the rectifier fails at startup, the bypass LED will light up. When the inverter starts up, the UPS will transfer from bypass mode to inverter mode, then the bypass LED extinguishes and the inverter LED lights up.

No matter whether the UPS can work normally or not, all the status will be shown on the LCD display.

4.2.2 Test procedure



CAUTION!

The UPS is operating normally. It may take 60 seconds to boost up the system and perform self-test completely.

◆ Switch OFF INPUT breaker of the PDU to simulate utility failure, the rectifier will turn off and the battery should feed the inverter without interruption. At this time, the LEDs of battery should be turned on.

◆ Turn ON INPUT breaker of the PDU to simulate utility recovery, the rectifier will restart automatically after 20 seconds and the inverter will supply to the load. It is suggested to use Dummy loads for testing. The UPS can be loaded up to its maximum capacity during load test.

4.2.3 MAINTENANCE BYPASS

To supply the load via Mains, you may simply active the internal mechanical bypass switch.



CAUTION!

The load is not protected by the UPS when the internal mechanical bypass system is active and the power is not conditioned.

Switch to mechanical bypass



CAUTION!

If the UPS is running normally and can be controlled through the display, please perform the following steps:

◆ Open the cover of MAINTENANCE breaker of the PDU, the UPS turns to bypass mode automatically.

◆ Turn ON MAINTENANCE breaker of the PDU;

◆ Switch OFF BATTERY breaker;

◆ Switch OFF INPUT breaker of the PDU;

◆ Switch OFF OUTPUT breaker of the PDU;

At this time the input source will supply to the load through the MAINTENANCE breaker.

Switch to normal operation (from mechanical bypass)



CAUTION!

Never attempt to switch the UPS back to normal operation until you have verified that there are no internal UPS faults.

◆ Turn ON INPUT breaker of the PDU.

◆ Turn ON BATTERY breaker.

The UPS powers from the static bypass instead of the maintenance bypass, then the bypass LED will light up.

◆ Turn ON OUTPUT breaker of the PDU.

◆ Switch OFF the MAINTENANCE breaker of the PDU, then the output is supplied by the static bypass of the UPS.

◆ Put on the cover of MAINTENANCE breaker of the PDU.

The rectifier will operate normally after 30 seconds. If the inverter works normally, the system will be transferred from bypass mode to normal mode.

4.2.4 Cold start procedure

CAUTION!

UPS can cold-start when the input AC Utility Failure, but battery is normal. Follow these procedures.

- Turn ON the BATTERY breaker.

  The battery will feed the Auxiliary power.

- Turn ON the OUTPUT breaker of the PDU.
- Trigger the cold start(Cold start) button as the position 1 below drawing.

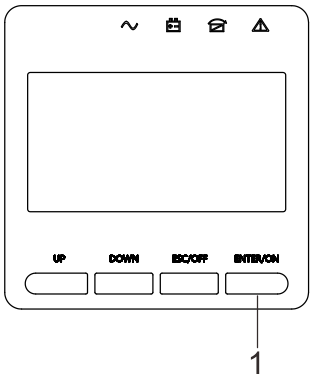

When battery normal, rectifier starts operation, 30s later, inverter starts and operates and battery LED on.

4.2.5 Shut down procedure

CAUTION!

This procedure should be followed to completely shut down the UPS and the LOAD. After all power switches, isolators and circuit breakers are opened, there will be no output.

- Switch OFF the BATTERY breaker；
- Switch OFF the INPUT breaker of the PDU.
- Switch OFF the OUTPUT breaker of the PDU. The UPS shuts down；
- To completely isolate the UPS from AC input, all input switches of Utility shall be completely off, which includes the ones for rectifier and bypass.
- The primary input distribution panel, which is often located far away from the UPS area, so a label should be posted to advise service personnel that the UPS circuit is under maintenance.

WARNING!

Wait for about 40 minutes for the internal D.C. bus bar capacitors to be completely discharged.

4.3 The LCD Display

4.3.1 LCD Display Information

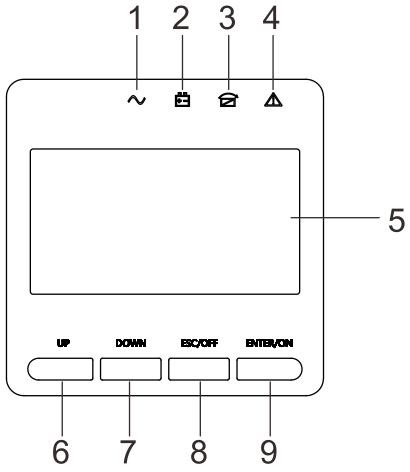

Overview of the operating panel of the UPS

(1) INVERTER LED
(2) BATTERY LED
(3) BYPASS LED
(4) ALARM LED
(5) LCD display
(6) UP button
(7) DOWN button
(8) ESC /OFF button
(9) ENTER/ON button

LED indicator light

LED indicator	Function
	Red:UPS fault information
	Yellow:UPS in bypass mode
	Yellow:UPS in battery mode
	Green:UPS works normally
Attention:These lights will display different indications in different operating modes.	



CAUTION!

The display provides more functions than those described in this manual.

NOTICE! The display provides more functions than those described in this manual. There are 8 interfaces available in the LCD display:

ITEM	Interface Description	Content Displayed
01	Model	Model
02	Input	Voltage & Frequency
03	Output	Voltage & Frequency
04	Bat.	Voltage & Current
05	Temperature	PFC/Internal temperature and ambient temperature
06	Load	Load
07	Bus voltage	Bus voltage ±
08	Software version	DSP version of inverter software

When the UPS is connecting with the Utility or Battery at cold start mode, it shows as drawing below:

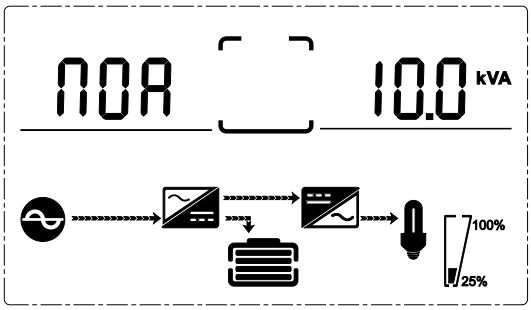

(1) Operational Status and mode

1) Operational Status and mode When the UPS at single mode, it shows “NOR” or “ECO” or “CF”.
2) Press “DOWN” button, the UPS goes to next page as shown below.

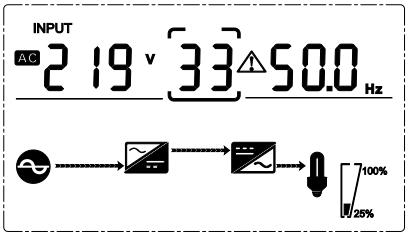

（2）Input voltage

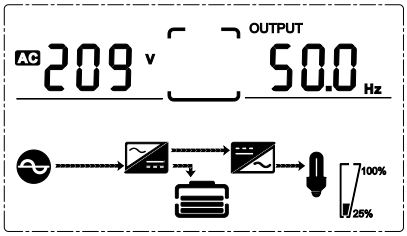

（3）Output voltage

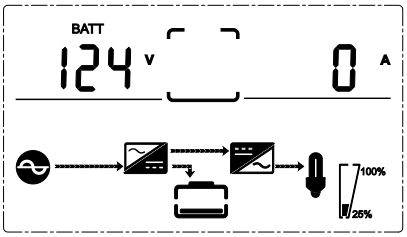

（4）Bat voltage

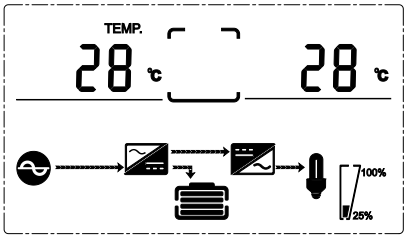

(5) PFC/ Ambient temperature up,

only shows the high temperature

Internal temperature（down）

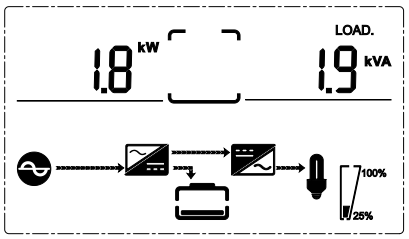

(6) Load

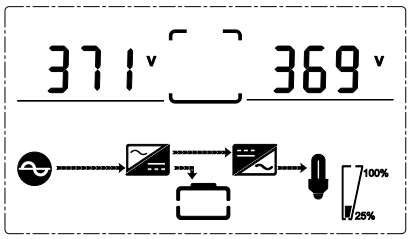

(7) Bus voltage

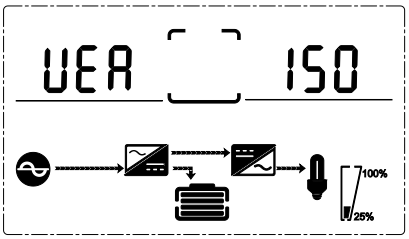

(8) Software version

4.3.2 Parameters setting

The setting function is controlled by 4buttons (ENTER/ON, ESC/OFF, UP,DOWN): ENTER /ON---goes into the setting page and value adjustment; UP & DOWN ---for choosing different pages.
After the UPS turn ON, press buttons UP & DOWN for 3 seconds and then goes into the setting interface page. Press up or down to select the required setting interface, press enter / on to enter the value adjustment state, press up or down to adjust the value and press on to confirm, keep pressing the down button until the setting interface is exited and saved .

4.3.2.1 Mode setting

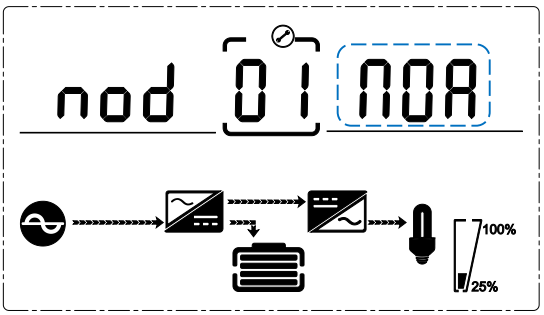

Mode setting (Note: Inside the broken-line is the flashing part.)
After ENTERing the setting menu, it's mode setting defaulted, and the mode setting line flashing as in above picture.

- Use button ENTER /ON to choose different mode. There are 5 different modes for setting: NOR, ECO, PAL, GEN, CF.
- Press UP & DOWN to exit the mode setting (save the mode setting), and goes to output voltage setting or Battery self-test setting.

4.3.2.2 Output voltage class setting

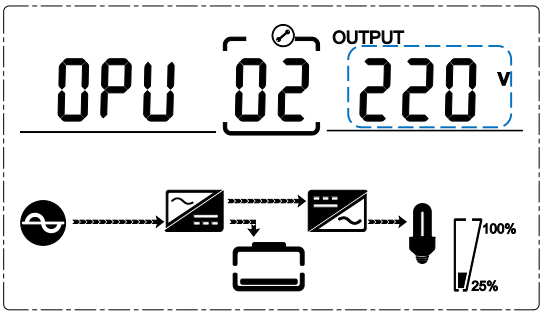

Output voltage setting

(Note: Inside the broken-line is the flashing part.)

When under the mode setting press DOWN or when under frequency setting press UP, it goes to the output voltage setting. The output voltage line flashes as in above picture.

- Use button ENTER/ON to choose the different output voltage. There are 4 different voltages---208, 220, 230, 240.
- Press UP & DOWN button to exit the output voltage setting (save the output voltage setting) and goes to mode setting or frequency setting.

NOTE: When powered by inverter, it is necessary to turn off the inverter before setting voltage and frequency level.

4.3.2.3 Output frequency setting

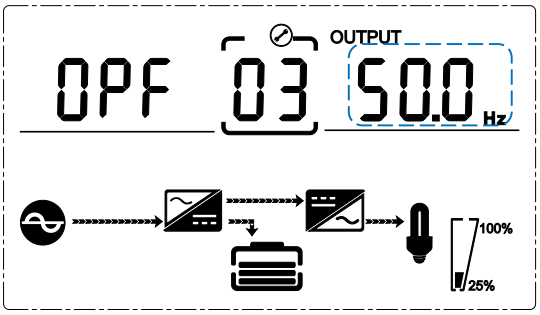

Frequency setting

(Note: Inside the broken-line is the flashing part.)

When under the output voltage setting press DOWN or when under battery capacity setting press UP, it goes to the frequency setting. The frequency line flashes as in above picture.

- Use button ENTER/ON to choose the different frequency. There are 2 different frequency ---50/60Hz.
- Press UP & DOWN button to exit the frequency setting (save the frequency setting) and goes to output voltage setting or battery capacity setting.

Note: When powered by inverter, it is necessary to turn off the inverter before setting voltage and frequency level.

4.3.2.4 Battery capacity setting

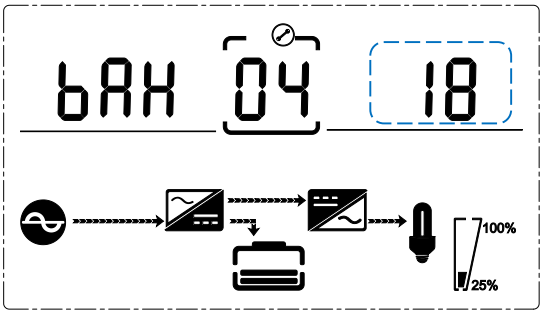

Battery capacity setting

(Note: Inside the broken-line is the flashing part.)

When under the frequency setting press DOWN or when under battery quantity setting press UP, it goes to the battery capacity setting. The battery capacity line flashes as in above picture.

- Use button ENTER/ON to choose the different battery capacity. Battery capacity range is 5-200Ah. (Note: long-press of UP or DOWM can adjustment battery capacity quickly)
- Press UP & DOWN button to exit the battery capacity setting (save the capacity setting) and goes to frequency setting or battery quantity setting.

4.3.2.5 Battery quantity setting

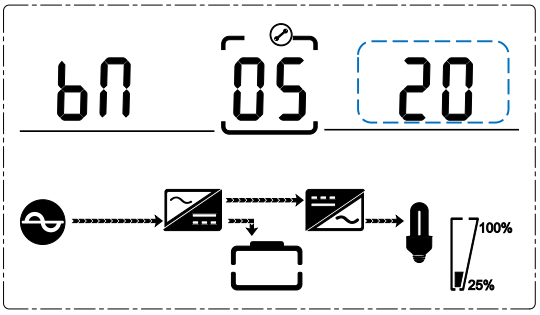

Battery quantity setting

(Note: Inside the broken-line is the flashing part.)

When under the battery capacity setting press DOWN or when under bypass voltage upper limit setting press UP, it goes to the battery quantity setting. The battery quantity line flashes as in above picture.

- Use button ENTER/ON to choose the different battery quantity. Battery quantity range is 16, 18, 20
- Press UP & DOWN button to exit the battery quantity setting (save the battery quantity setting) and goes to battery capacity setting or bypass voltage upper limit setting.

4.3.2.6 Bypass Volt-Hi setting

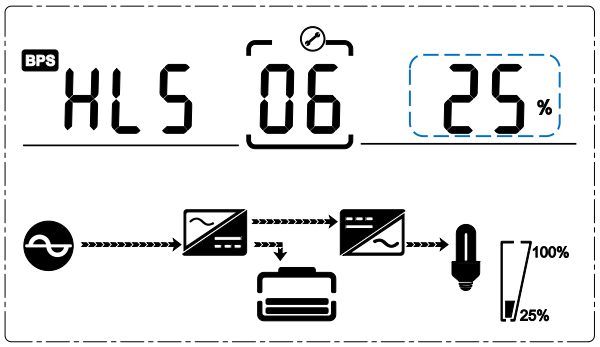

Bypass voltage upper limit setting

(Note: Inside the broken-line is the flashing part.)

When under the battery quantity setting press DOWN or when under bypass voltage lower setting press UP, it goes to the bypass upper limit setting. The bypass upper limit line flashes as in above picture.

- Use button ENTER/ON to set the different bypass voltage upper limit. The bypass voltage upper limit range is 10%, 15%, 25%.
- Press UP & DOWN button to exit the bypass voltage upper limit setting (save the bypass voltage upper limit setting) and goes to battery quantity setting or bypass voltage lower limit setting.

4.3.2.7 Bypass Volt-Lo setting

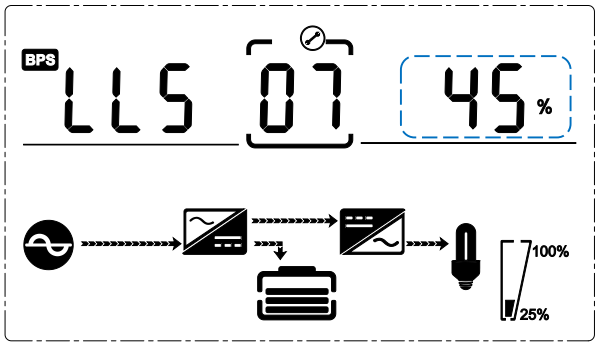

Bypass voltage lower limit setting

(Note: Inside the broken-line is the flashing part.)

When under the bypass voltage upper limit setting press DOWN or when under Buzzers mute setting press UP, it goes to the bypass lower limit setting. The bypass lower limit line flashes as in above picture.

- Use button ENTER/ON (to set the different bypass voltage lower limit. The bypass voltage lower limit range is 10%, 20%, 30%, 45%.
- Press UP & DOWN button to exit the bypass voltage lower limit setting (save the bypass voltage lower limit setting) and goes to bypass upper limit setting or Buzzers mute setting.

4.3.2.8 Buzzer Mute Setting

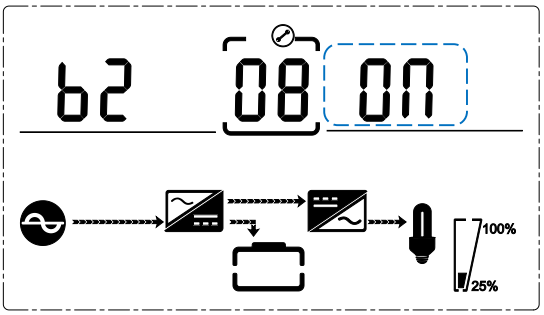

Buzzers mute setting (Note：flashing part in dashed box)

Press DOWN under bypass voltage lower limit setting or press UP under the Battery self-test setting can ENTER the buzzer setting. Now the setting status is flashing as the Figure shows (note: on=mute; off= no mute). When press, it shows the mute cycle setting, the selection includes ON and OFF. (Press the up button or down button can exit the mute setting (save the mute setting status) and switch to bypass voltage lower limit setting or Battery self-test setting (note: when in stand-alone mode, press down button to exit and save the settings, then the settings is completed for stand-alone unit).

4.3.2.9 Battery Test Setting

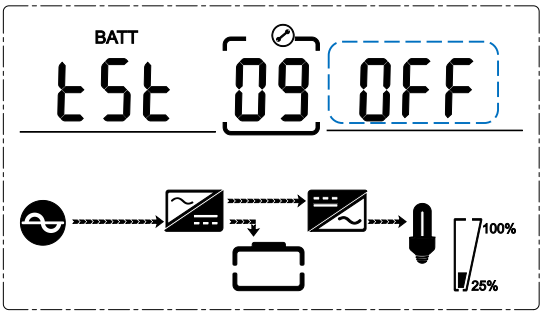

Battery self-test setting

This page is the introduction to the Battery self-test setting. The default Settings is “OFF” when the UPS has no need of the battery self-test function. When turn to “ON”, batteries can do the self-test automatically per 30 days. Three kinds of Battery Self-test Time can be chose as below.

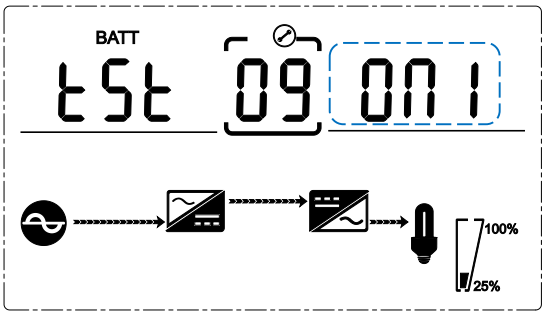

When choosing On1, UPS can transfer to Battery Mode automatically per 30 days. And the Battery Self-test Time is 10 seconds.

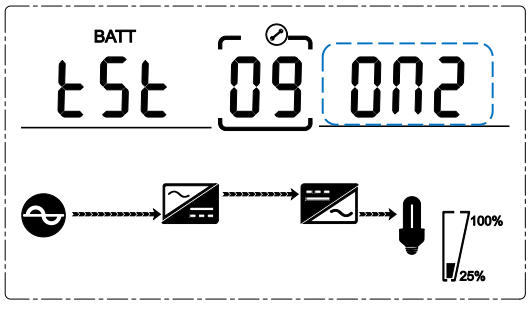

When choosing On2, UPS can transfer to Battery Mode automatically per 30 days. And the Battery Self-test Time is 10 minutes.

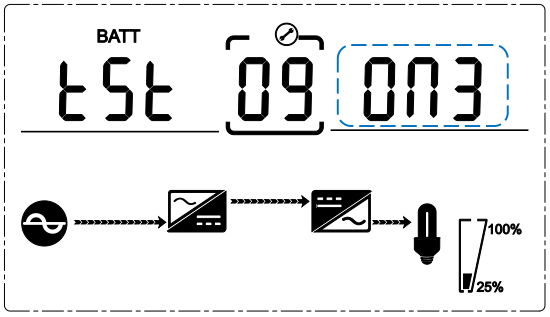

4.3.2.10 Parallel ID setting

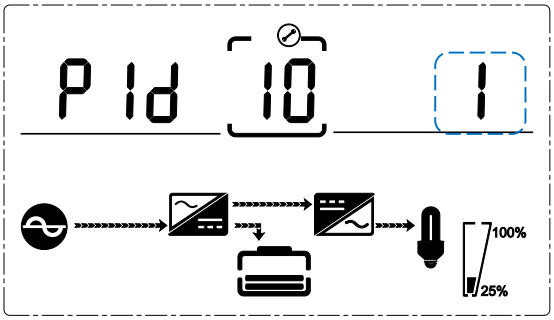

Parallel ID setting

(Note: Inside the broken-line is the flashing part.)

When under the Battery self-test setting press DOWN or when under parallel quantity setting press UP, it goes to the parallel ID setting. The parallel ID flashes as in above picture.

- Use button ENTER/ON to set the different parallel ID. The parallel ID range is 1~4.
- Press ESC/OFF button to exit the parallel ID setting (save the parallel ID setting) and goes to Battery self-test setting or parallel quantity setting.

NOTICE! Parallel cable cannot be connected when setting the parallel parameters.

4.3.2.11 Parallel quantity setting

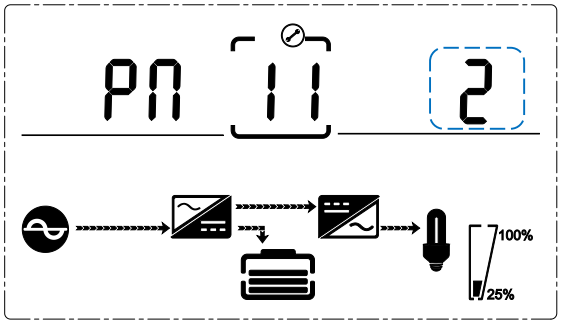

Parallel quantity setting

(Note: Inside the broken-line is the flashing part.)

When under the parallel ID setting press DOWN or when under parallel redundancy quantity setting press UP, it goes to the parallel quantity setting. The parallel quantity flashes as in above picture.

- Use button ENTER/ON to set the parallel quantity. The parallel quantity range is 2~4.
- Press ESC/OFF button to exit the parallel quantity setting (save the parallel quantity setting) and goes to parallel ID setting or parallel redundancy quantity setting.

4.3.2.12 Parallel redundancy quantity setting

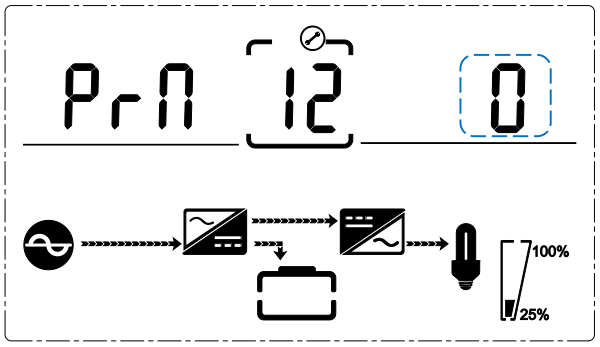

Parallel redundancy quantity setting

(Note: Inside the broken-line is the flashing part.)

When under the parallel quantity setting press DOWN, it goes to the parallel redundancy quantity setting. The parallel redundancy quantity flashes as in above picture.

- Use button ENTER/ON to set the parallel redundancy quantity. The parallel redundancy quantity range is 0~3
- Press UP& DOWN to go to Parallel redundancy quantity setting, or ESC/OFF button to exit the mode setting. Then UPS LCD panel setting is accomplished.

4.4 Parallel parameters setting

Parallel system should be commissioning when the stand-alone are all intact.

Take 4 units in parallel for example.

1) Confirm the input/output wires connection and input phase sequence are correct; switch off the battery breaker of each UPS, and measure the battery voltage of all battery group are normal.
2) Connect the parallel cable, it should be formed loop connection.
3) Switch on the input breaker of unit 1,and access LCD setting interface to setting the Working Mode, Parallel ID, Parallel Number, Parallel redundant Number. The setting interface is showed as below, require setting the in series number and capacity of battery. The output voltage level and Bypass protection range are default setting.

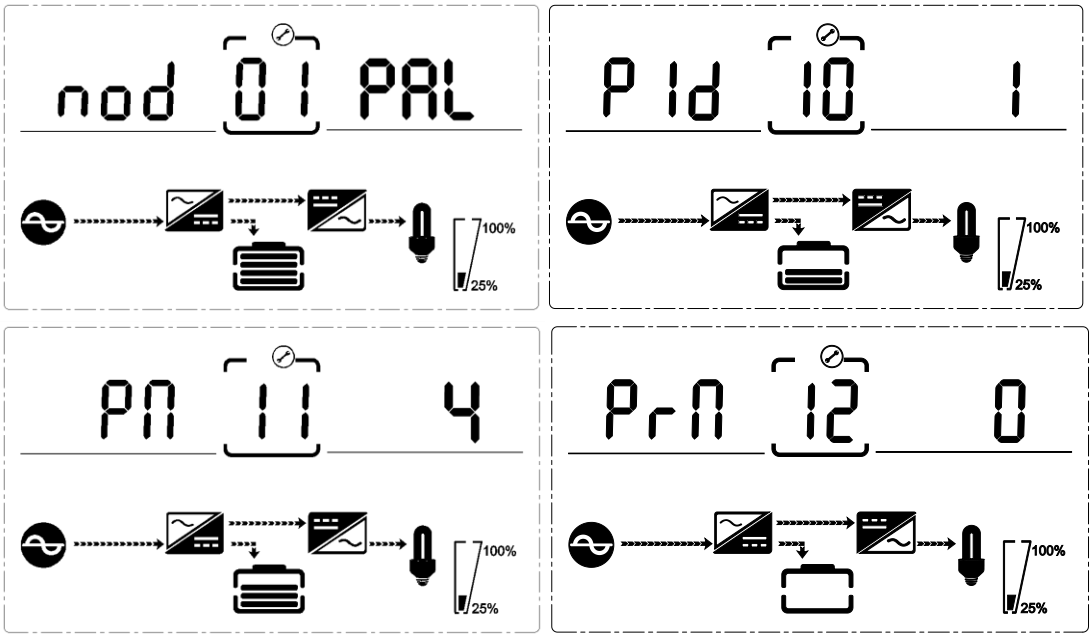

4) Turn off the input breaker of Unit 1, and make sure the UPS is off. Turn on the input breaker of Unit 2,access the LCD setting interface, setting the parallel working mode, ID (NO.2) , parallel 4 units, redundant number .The other setting are the same as UPS 1 operation.

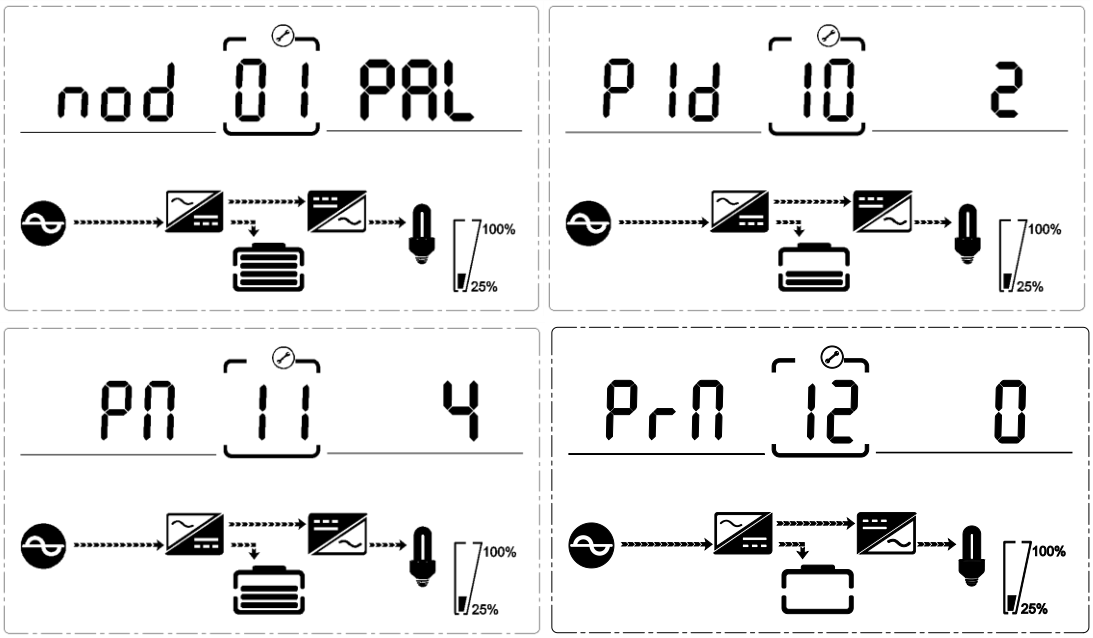

5) For Unit 3 and Unit 4 UPS, the operation setting are all the same as Unit 1 and 2.

6) Turn on Input/output breaker of all the paralleled UPS, then confirm all the setting are correct. Each UPS has their owed different ID.

7) There are only one master in parallel system .The UPS has a dot behind parallel mode is the master. You can turn on all the UPS after confirm all the setting are correct.

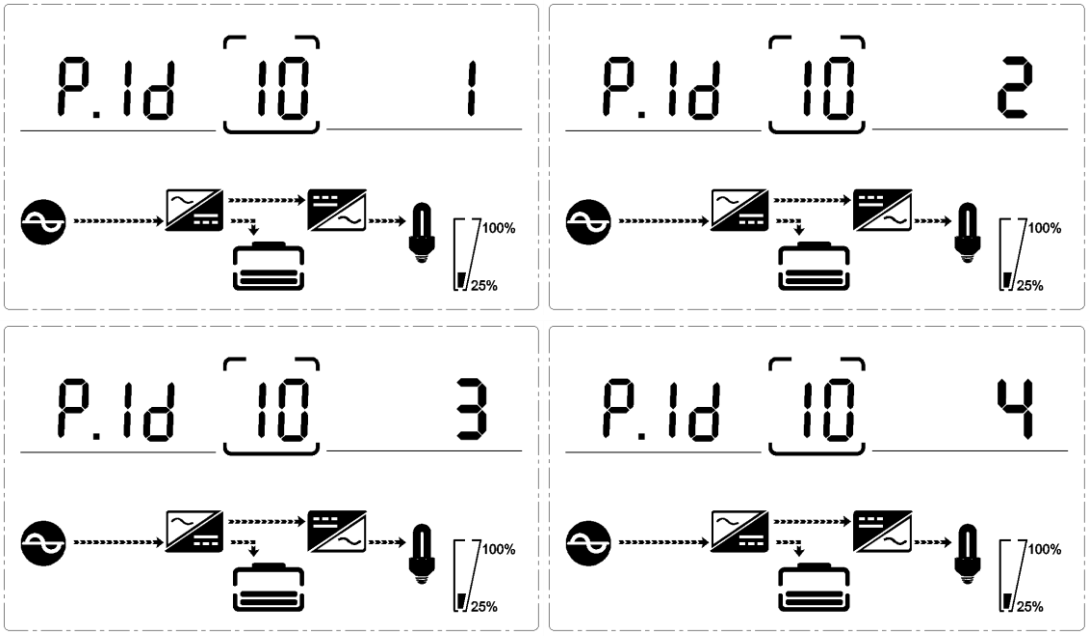

8) Turn on all the battery breaker and confirm the parameter (V/I) are normal.

9) Connected the Load, and check whether the output current are balance.

Switch on and off the utility breaker to test all the UPS converters system from Utility to battery and restored function are working find.

4.5 Display Troubleshooting

This section lists the alarm messages that the UPS might display. This section is listed with each alarm message to help you troubleshoot problems .

Alarm Information

Item	UPS Alarm Warning	Buzz	LED
1	Rectifier Fault	Beep continuously	Fault LED lit
2	Inverter fault(Including Inverter bridge is shorted)	Beep continuously	Fault LED lit
3	Inverter Thyristor short	Beep continuously	Fault LED lit
4	Inverter Thyristor broken	Beep continuously	Fault LED lit
5	Bypass Thyristor short	Beep continuously	Fault LED lit
6	Bypass Thyristor broken	Beep continuously	Fault LED lit
7	Fuse broken	Beep continuously	Fault LED lit
8	Parallel relay fault	Beep continuously	Fault LED lit
9	Fan fault	Beep continuously	Fault LED lit
10	Reserve	Beep continuously	Fault LED lit
11	Auxiliary power fault	Beep continuously	Fault LED lit
12	Initialization fault	Beep continuously	Fault LED lit
13	P-Battery Charger fault	Beep continuously	Fault LED lit
14	N-Battery Charger fault	Beep continuously	Fault LED lit
15	DC Bus over voltage	Beep continuously	Fault LED lit
16	DC Bus below voltage	Beep continuously	Fault LED lit
17	DC bus unbalance	Beep continuously	Fault LED lit
18	Soft start failed	Beep continuously	Fault LED lit
19	Rectifier Over Temperature	Twice per second	Fault LED lit
20	Inverter Over temperature	Twice per second	Fault LED lit
21	Reserve	Twice per second	Fault LED lit
22	Battery reverse	Twice per second	Fault LED lit
23	Cable connection error	Twice per second	Fault LED lit
24	CAN comm. Fault	Twice per second	Fault LED lit
25	Parallel load sharing fault	Twice per second	Fault LED lit
26	Battery over voltage	Once per second	Fault LED blinking
27	Mains Site Wiring Fault	Once per second	Fault LED blinking
28	Bypass Site Wiring Fault	Once per second	Fault LED blinking
29	Output Short-circuit	Once per second	Fault LED blinking
30	Rectifier over current	Once per second	Fault LED blinking
31	Bypass over current	Once per second	BPS LED blinking
32	Overload	Once per second	INV or BPS blinking
33	No battery	Once per second	BATTERY blinking
34	Battery under voltage	Once per second	BATTERY blinking
35	Battery low pre-warning	Once per second	BATTERY blinking
36	Overload Delay	Once per second	Bypass LED blinking

Item	UPS Alarm Warning	Buzz	LED
37	DC component over limit.	Once per 2 seconds	INV blinking
38	Parallel Overload	Once per 2 seconds	INV blinking
39	Mains volt. Abnormal	Once per 2 seconds	BATTERY LED lit
40	Mains freq. abnormal	Once per 2 seconds	BATTERY LED lit
41	Bypass Not Available		BPS blinking
42	Bypass unable to trace		BPS blinking
43	Inverter on invalid		
44	Reserve		
45	EPO active	Beep continuously	Fault LED lit
46	PDU active		Bypass LED lit
47	Transformer Over Temperature	Beep continuously	Fault LED lit

4.6 Options

SNMP card: built-in SNMP card optional

- Loosen the 2 torque screws (on each side of the card).
- Carefully insert the SNMP card and lock the screws.

The slot called SNMP supports the MEGAtec protocol. SNMP card port is also a tool to remotely monitor and manage any UPS system.

SNMP card supports the Modem Dial-in (PPP) function to enable the remote control via the internet when the network is unavailable.

In addition to the features of a standard SNMP card, SNMP card has the option to add NetFeeler Lite to detect temperature, humidity, smoke and security sensors.

Thus, making SNMP card a versatile management tool. SNMP card also supports multiple languages and is setup for web-based auto language detection.

Please download the corresponding software from the support section of the HIKVISION website. Specific Operation and function description are provided for reference: KPM220 User Manual

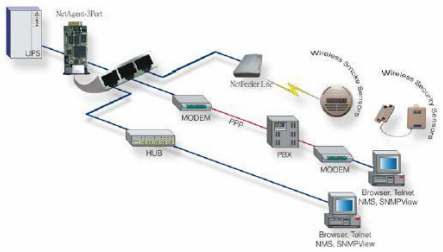

Typical topology of the UPS Network Management

Relay card

A 10-pin terminal is supported to offer the signals of Bypass, Utility Failure, Inverter On, Battery Low, UPS fault, UPS Alarm, and UPS Shutdown.

The relay communication card contains six dry contact outputs and one dry input. The inputs and outputs are factory programmed according to functions listed in the table

Table: Relay Contacts (communication card)

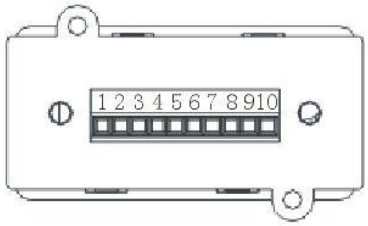

Pin	Function Description	Input or Output
1	Utility Failure	Output
2	Battery Low	
3		
4	Bypass On	
5	UPS Fault	
6	Inverter On	
7	Summary Alarm	
8	common	
9	Remote Shutdown +	Input (5~12V)
10	Remote Shutdown -	



Appendix 1 Specifications

GENERAL		
Capacity	6kVA / 6kW	10kVA / 10kW
Topology	Double Conversion On-Line	
Cooling	Fan cooled	
Dimension W x D x H (mm)	440*621.5*86.5	
Net Weight (kgs)	15	17
Installation Type	Rack/Tower	
INPUT		
Output Power	208/220/230(Default)/240Vac	
Input Voltage Range	110-300Vac(110-300Vac @ 50% load / 176-300Vac @ 100% load)	
Frequency Range	40-70Hz	
Harmonic distortion(THDi)	< 3%	
Power Factor	>0.99	
Input Connection	Terminal(L+N+G)	
OUTPUT		
Output Power	6kW	10kW
Power factor	1.0	
Output Waveform	Pure Sinewave	
Online Efficiency (up to)	95.0%	95.5%
Economy mode efficiency	98.8%	99%
Output Voltage	208/220/230(Default)/240Vac	
Voltage Regulation	±1%	
Output Voltage Regulation (Dynamic)	±5%	
Harmonic distortion(THDv)	< 1% (Full Linear load)	
	< 3% (Full nonlinear load)	
Output Frequency	50/60Hz ± 10%(Line mode); 50/60Hz(default) ±0.1%(Battery mode)	
Over Load Capability (Online mode)	105%~110%: UPS transfer to bypass after 60 minutes when the utility is normal 110%~125%: UPS transfer to bypass after 10 minutes when the utility is normal 125%~150%: UPS transfer to bypass after 1 minute when the utility is normal >150%: UPS transfer to bypass after 0.5 second when the utility is normal	
Over Load Capability (Battery mode)	105%~110%: UPS after 10 minute shut down 110%~125%: UPS after 1 minute shut down 125%~150%: UPS after 10 second shut down >150%: UPS after 0.5 second shut down	
Over Load Capability (Bypass mode)	105%~130%: Only Overload alarm 130%~150%: UPS after 10 minute shut down 150%~200%: UPS after 1 minute shut down >200%: after 0.5 second shut down	

Current Crest Ratio		3:1	
Outlets - Total	Non-Programmable Receptacles	Terminal (L+N+G)	
	Programmable Receptacles	C19*2+C13*3	
BYPASS			
Voltage range		208/220Vac Max.voltage: +25% (optional +10%,+15%,+20%) 230Vac Max.voltage: +20% (optional +10%,+15%) 240Vac Max.voltage: +15% (optional +10%) Min. voltage: -45% (optional -10%,-20%,-30%)	
Frequency range		Frequency Protection Range: ±10%	
ECO Range		Rated Voltage ± 10%	
BATTERY			
Nominal DC Voltage		192(Default)/216/240Vdc	
Charge Current (max.)		12A	15A
Communication Section and User Interface			
Control panel LCD (English-Language)+LED		2.4 inch Color screen	
Communication Interface		USB,RS232,RS485 port, Parallel port, Intelligent slot, SNMP card (optional), Relay card (optional)	
Emergency Power Off (EPO)		Yes	
ENVIRONMENT			
Operating temperature		0℃~40℃	
Storage temperature		-25℃~55℃ (without batteries)	
Humidity range		0~95%RH (Non -condensing)	
Operating altitude		0~1000 meters Normally operate; 1000~3000 meters Derating	
Protection Class		IP20	
Noise level (1m, Online mode, full load, float charging)		≤45dB	≤50dB
STANDARDS			
Safety		EN IEC 62040-1:2019 + A11:2021	
EMC		IEC 62040-2:2016, EN IEC 62040-2:2018, C2	
OTHERS			
Generator Compatible		Yes	
Short Circuit		Hold Whole System	
Overheat		Line Mode: Switch to Bypass; Backup Mode: Shut down UPS immediately	
Low battery voltage		Alarm and Switch off	
EPO		Shut down UPS immediately	
Audible & Visual alarms		Line Failure, Battery Low, Overload, System Fault	

Appendix 2 Problems and Solution

In case the UPS cannot work normally, it might be wrong in installation, wiring or operation. Please check these aspects first. If all these aspects are checked without any problem, please consult with local agent right away and provide below information.

（1）Product model name and serial number.

（2）Try to describe the fault with more details, such as LCD display info, LED lights status, etc.

Read the user manual carefully, it can help a lot for using this UPS in the right way. Some FAQ (frequently asked questions) may help you to troubleshoot your problem easily.

No.	Problem	Possible reason	Solution
1	Utility is connected but the UPS cannot be powered ON.	Input power supply is not connected; Input voltage low; The input switch of the UPS is not switched on.	Measure if the UPS input voltage/frequency is within the window. Check if UPS input is switched on
2	Utility normal but Utility LED does not light on, and the UPS operates at battery mode	The input breakers of the UPS are not switched on; input cable is not well connected	Switch on the input breaker; Make sure the input cable is well connected.
3	The UPS does not indicate any failure, but output do not have voltage	Output cable does not well connected; Output breaker do not switch on	Make sure the output cable is well connected; Switch on the output breaker.
4	Utility LED is flashing	Utility voltage exceeds UPS input range.	If the UPS operates at battery mode, please pay attention to the remaining backup time needed for your system.
5	Battery LED is flashing but no charge voltage and current	Battery breaker does not switch on, or batteries are damaged, or battery is reversely connected. Battery number and capacity are not set correctly.	Switch on the battery breaker. If batteries are damaged, need to replace whole group batteries, Connect the battery cables correctly; Go to LCD setting of the battery number and capacity, set the correct data.
6	Buzzer beeps every 0.5 seconds and LCD display “output overload”	Overload	Remove some load
7	The UPS only works on bypass mode	The UPS is set to ECO mode, or the transfer times to bypass mode are limited.	Set the UPS working mode to UPS type(non-parallel) or to reset the times of transferring to bypass or re-start the UPS
8	Cannot Cold-start	Battery switch is not properly closed: Battery fuse is blown Or Battery low: Battery quantity set wrong;	Close the battery switch: Replace the fuse: Recharge the battery: Power ON the UPS with AC to set the battery quantity &quantity;

Appendix 3 USB communication port definition

Definition of port：

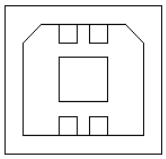



Connection between PC USB port and UPS USB port.

PC USB port	UPS USB port	Description
Pin 1	Pin 1	PC : +5V
Pin 2	Pin 2	PC : DPLUS signal
Pin 3	Pin 3	PC :DMINUS signal
Pin 4	Pin 4	Signal ground

Available function of USB

- Monitor UPS power status.
- Monitor UPS alarm info.
- Monitor UPS running parameters.
- Timing off/on setting.

Communication data format

Baud rate ---------- 9600bps

Byte length ---------- 8bit

End bit ---------- 1bit

Parity check ---------none

CAUTION!

USB, RS232 and RS485 interface cannot be used at the same time, you can only use one of them at one time.

Appendix 4 RS232 communication port definition

Definition of Male port：

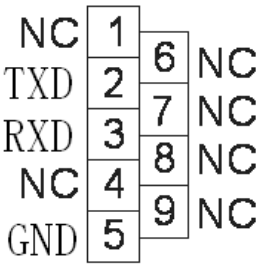

Connection between PC RS232 port and UPS RS232 port

PC RS232 port	UPS RS232 port	
Pin 2	Pin 2	UPS send,PC receive
Pin 3	Pin 3	PC send,UPS receive
Pin 5	Pin 5	ground

Available function of RS232

- Monitor UPS power status.
- Monitor UPS alarm info.
- Monitor UPS running parameters.
- Timing off/on setting.

RS-232 communication data format

Baud rate ---------- 9600bps

Byte length ---------- 8bit

End bit ---------- 1bit

Parity check ---------none

CAUTION!

USB, RS232 and RS485 interface cannot be used at the same time, you can only use one of them at one time.

Appendix 5 RS485 communication port definition

Definition of port：

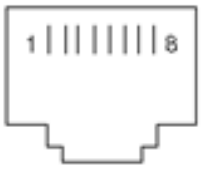

Connection between the Device's RS485 port and UPS RS485 port.

device(RJ45)	UPS(RJ45)	Description
Pin 1/5	Pin 1/5	485+ "A"
Pin 2/4	Pin 2/4	485 -"B"
Pin 7	Pin 7	12V
Pin 8	Pin 8	GND

Available function of RS485

- Monitor UPS power status.
- Monitor UPS alarm info.
- Monitor UPS running parameters.
- Timing off/on setting.

Communication data format

Baud rate ---------- 9600bps

Byte length ---------- 8bit

End bit ---------- 1bit

Parity check ---------none

CAUTION!

USB, RS232 and RS485 interface cannot be used at the same time, you can only use one of them at one time.

RS485 port pin7 is 12Vdc!

Appendix 6 EPO instruction

EPO is emergency power off of UPS. This function can be used to turn off the load and UPS thermal protection. For example, when the indoor temperature is too high. When EPO is activated, the UPS immediately turns off all outputs and power converter, and the UPS remains in the fault alarm state.



EPO connection

EPO function test:

(1) Confirm that the machine is turned off and disconnected from the power grid;

(2) The two pins of the EPO terminal are connected to a normally closed passive switch (e.g.: the connection terminal of the green female pin);

(3) Connect to UPS and restart;

(4) Turn on the EPO external switch. Test whether the UPS is turned off (e.g.: unplug the terminal);

(5) UPS turns off when the switch is turned on, indicating that the EPO setting is valid;

(6) To resume normal operation, close the external switch and restart the UPS.

Note: Please make sure that the EPO function is normal before using the UPS with critical equipment load to avoid unexpected power failure of the load.

Appendix 7 Optional port definition

The load segment set can control the power supply of the socket through the power management software or through the display and provide an orderly shutdown and startup of your equipment. For example, during a power outage, you can keep critical equipment running and shut down other equipment. This feature allows you to effectively manage battery usage and save battery power.

For example:

The EOD of output3 socket can be set to 1.92V/cell. When the battery voltage drops to 1.92V/cell, output3 socket will automatically disconnect the load output, which can extend the battery mode operation time of output1 and output2 socket loads;

Similarly, the EOD of output2 socket can be set to 1.84V/cell. When the battery voltage drops to 1.84V/cell, output2 socket will automatically disconnect the load output, which can extend the battery mode operation time of output1 load;

Finally, when the battery voltage drops to the EOD voltage (1.75V/cell), the UPS shuts down the all of output.

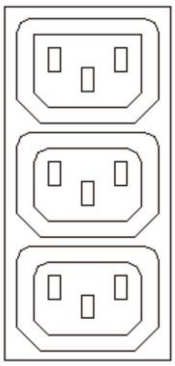

Output3 Socket

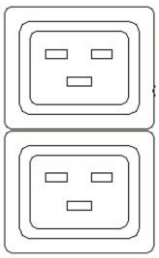

Output2 Socket